TILANG- DINING BLOCK(136 Panels)

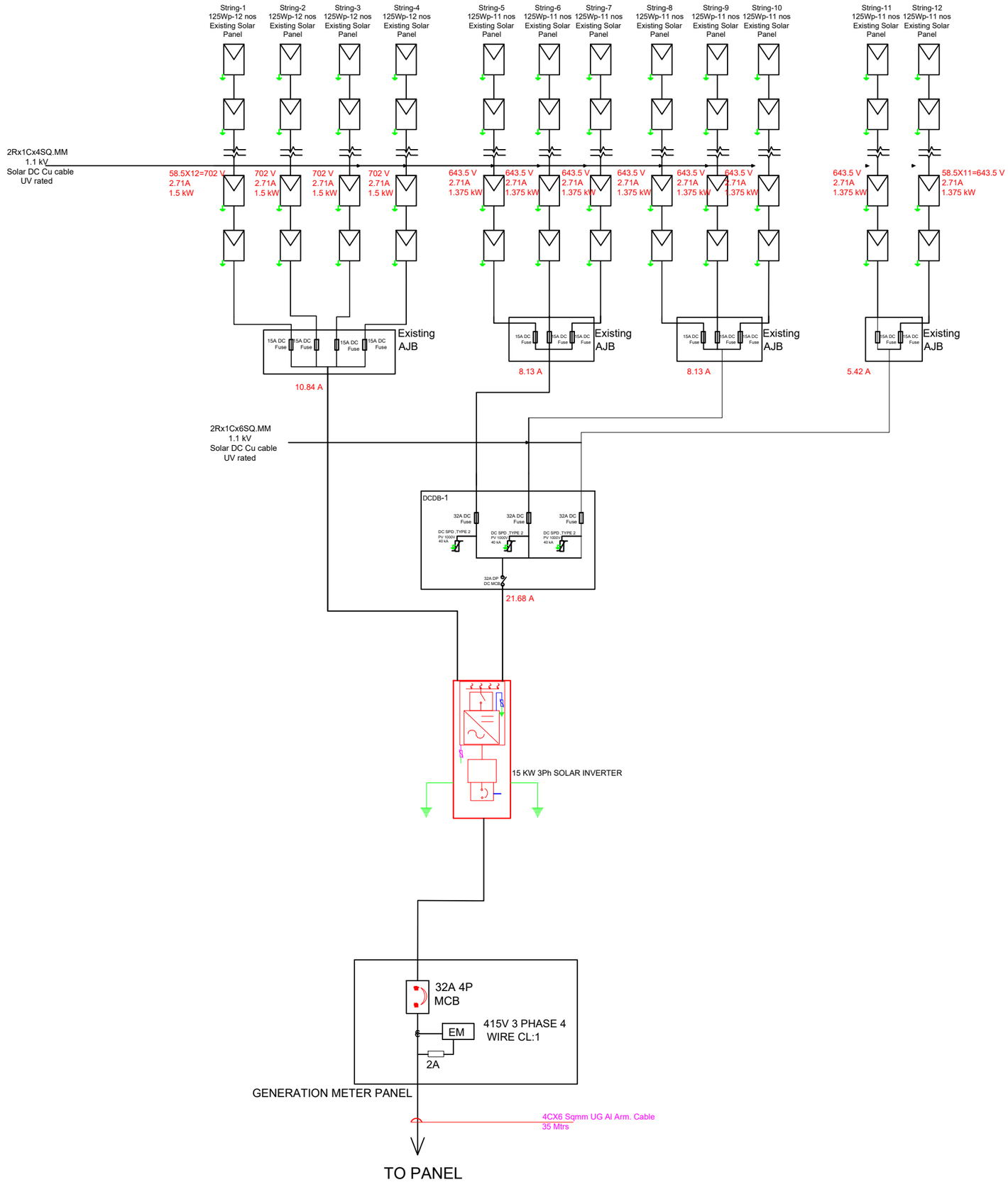

TILANG- A BLOCK(92 Panels)

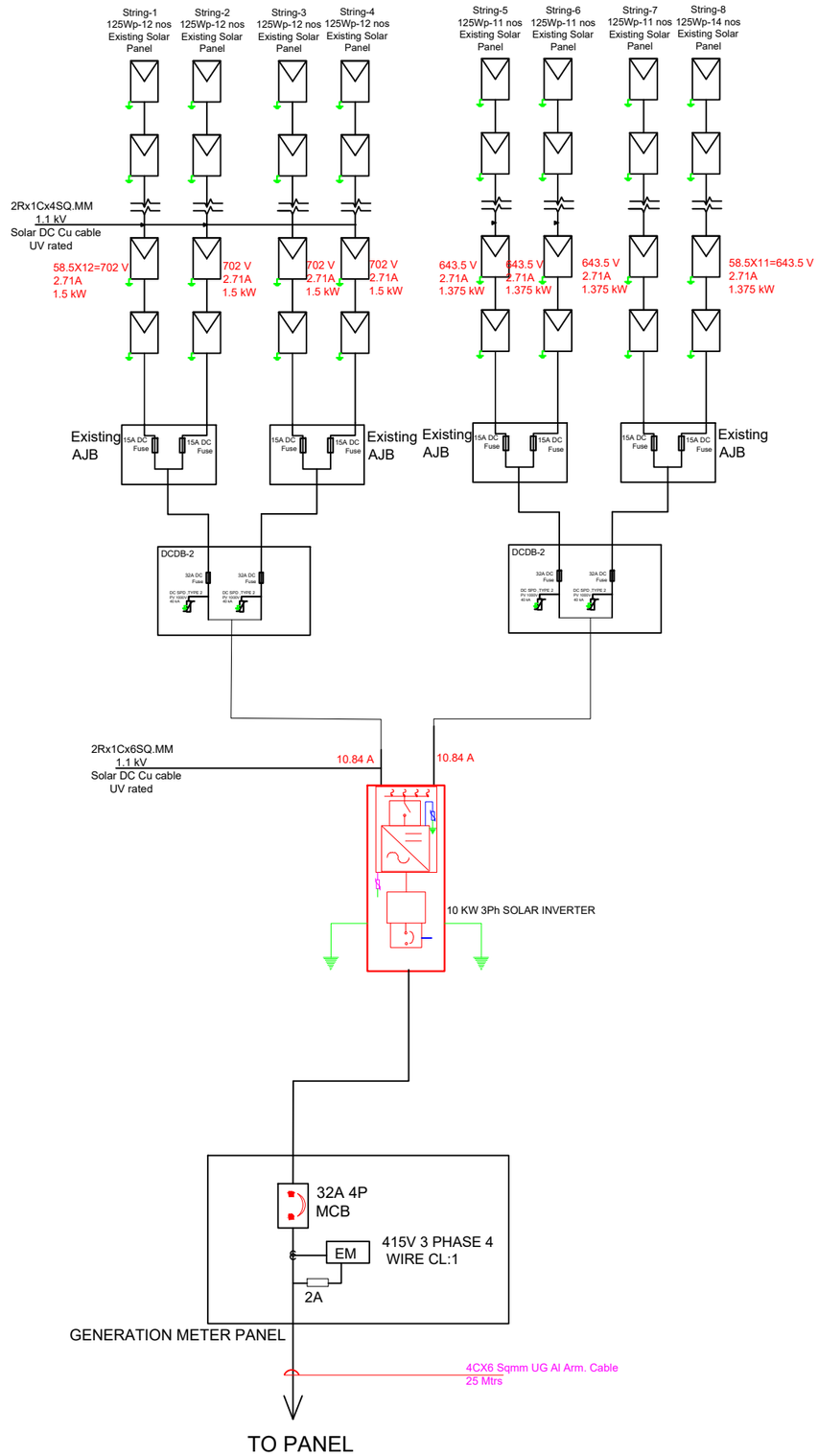

Title	**8.8 KWp Solar Power Plant-Tilang A& Dining block**
Project	**Installation of 8.8 KWp Solar Power Plant and connected electrics at IIT Palakkad.**