Terrace Floor at K01(INV-1)- 161 Panels

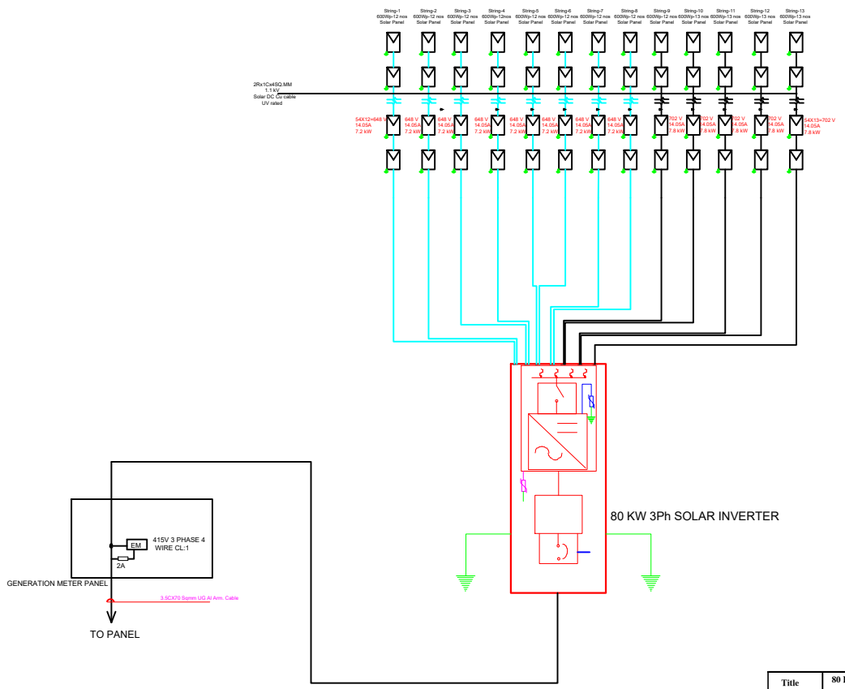

Title	80 KWp Solar Power Plant-Saveri
Project	SITC of 80 KWp Solar Power Plant and connected electrics at IIT Palakkad.

Terrace Floor at K01(INV-2)- 135 Panels

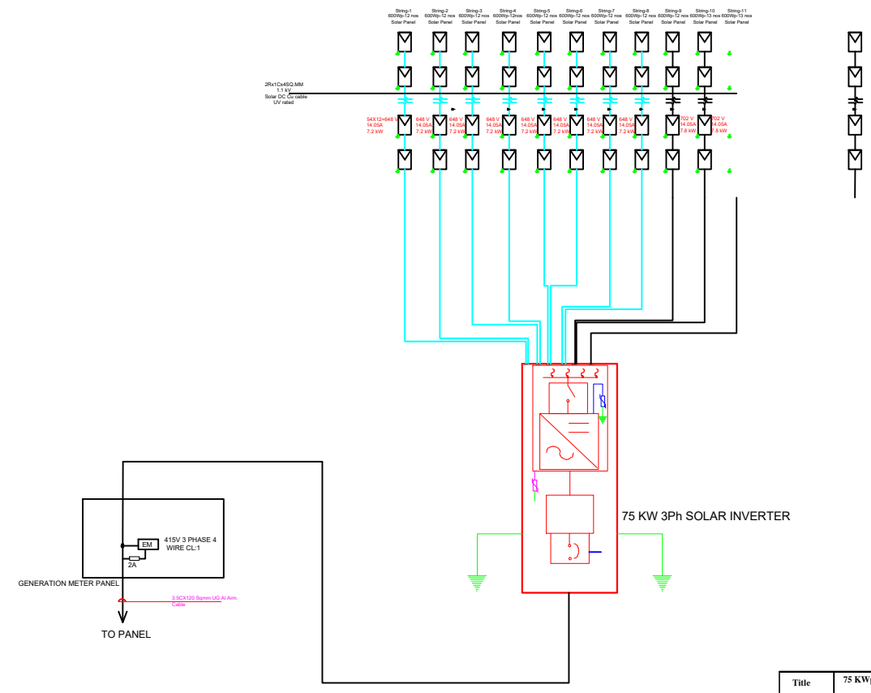

Title	75 KWp Solar Power Plant-Saveri
Project	SITC of 75 KWp Solar Power Plant and connected electrics at IIT Palakkad.