Terrace Floor at K01(INV-1)- 147 Panels

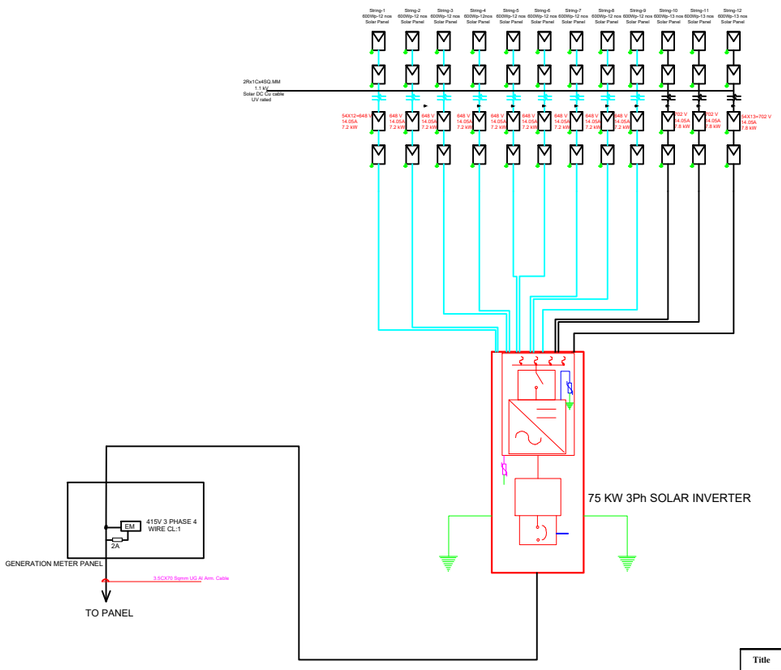

Title	75 KWp Solar Power Plant-Malhar
Project	SITC of 150 KWp Solar Power Plant and connected electrics at IIT Palakkad.

Terrace Floor at K01(INV-2)- 77 Panels

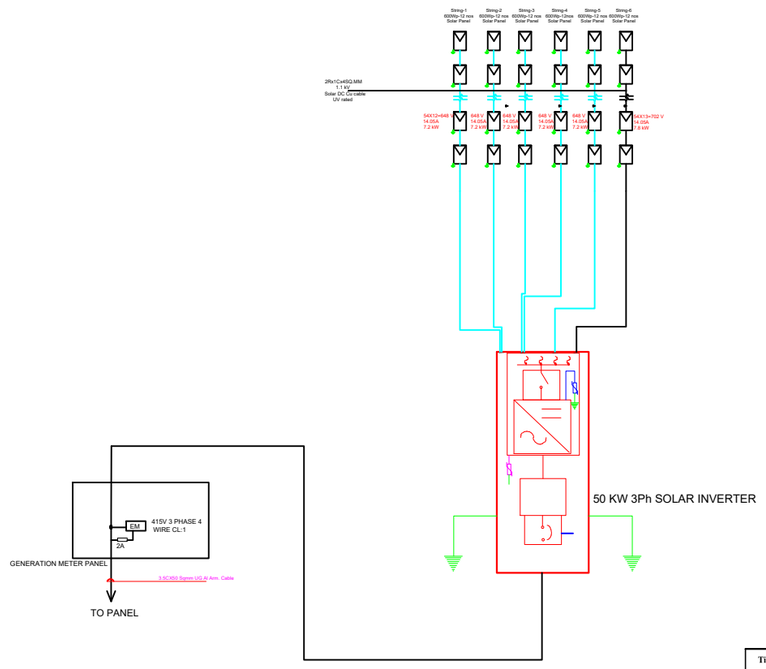

Title	50 KWp Solar Power Plant-Malhar
Project	SITC of 50 KWp Solar Power Plant and connected electrics at IIT Palakkad.